“What About Transfer Zones?” – One of Eric Mountjoy’s Provocative Questions*

D. Lebel[1]

Search and Discovery Article #30321 (2014)
Posted March 17, 2014

*Adapted from extended abstract prepared in conjunction with presentation at CSPG/CSEG/CWLS GeoConvention 2012, (Vision) Calgary TELUS Convention Centre & ERCB Core Research Centre, Calgary, AB, Canada, 14-18 May 2012, AAPG/CSPG©2014

[1]Geological Survey of Canada, Earth Sciences Sector, Natural Resources Canada, Ottawa, Ontario, Canada (dlebel@nrcan.gc.ca)

Abstract

This article is a retrospective of the author’s Ph.D. research, conducted under the supervision of Dr. Eric Mountjoy, a lifelong student of Cordilleran geology and distinguished professor of geology at McGill University, on the occasion of a posthumous special session in his honour at the GeoConvention 2012 conference. This research, undertaken in the late 1980’s to mid-1990’s, contributed to insights on the structural geology and kinematics of the Central Canadian Rocky Mountains in particular, and thin-skinned thrust belt development in general. This research incorporated field observations and mapping, analysis and cross-sectional interpretation of subsurface data, and development and application of computer models to address the formation and utility of displacement transfer zones.

Introduction

"What about transfer zones?" It was with this seemingly simple but provocative question from Eric Mountjoy that I was drawn into Canadian Cordilleran geology and thrust tectonics research. The concept of displacement transfer zones was originally elucidated by Dahlstrom (1969), among other key concepts, as one of the main mechanisms of thrust-and-fold belt development. He proposed that thrust transfer zones represent a wide-spread, large-scale deformation mechanism for thrust-and-fold belts, with exemplars from the Canadian Rocky Mountains.

A thrust transfer zone is defined as the zone of overlap between two or more thrusts that are linked via a common underlying basal décollement (Figure 1a). Dahlstrom (1969, p. 752) described this as “*a kind of lap joint wherein the fault whose displacement is diminishing is replaced by an echelon fault whose displacement is increasing*”. Transfer zones allow individual faults to have limited along-strike length and rapidly varying thrust displacement, while the thrust belt as a whole has near uniform or very slowly varying total shortening along its trend.

The “transfer” of fault motion between overlapping thrust faults is an appealing concept, especially when applied to the final configuration of a thrust belt. The Rocky Mountains and Foothills evolved into a series of overlapping thrust sheets that together, at the scale of the entire belt,

behaved as a loosely coherent thrust plate as it progressively deformed and advanced into the foreland above a common basal décollement. Within this broad thrust belt, shortening is concentrated on a relatively small number of large thrust faults. As Dahlstrom (1969, p. 753) put it: *"Recognition of transfer zones enables correlations to be made between thrust faults. Although one fault terminates, its place is taken by another and the zone of thrusting persists. On this basis, a frontal zone and five principal zones of thrusting can be identified within the Foothills and Front Ranges over a distance of some 400 miles (643.7 km)."*

Dahlstrom (1969) concluded from his observation of this series of thrusts faults with overlapping terminations (Figure 1b) that "transfer zones" accommodated the redistribution of thrust displacement between adjacent thrusts. Some of the transfer zones he identified happened to be in Eric Mountjoy's Ph.D. thesis area: the Miette area map sheet (1960; 2010). As an example, both terminations of the Nikanassin Thrust Fault occur in this vicinity, where they overlap with other faults. The northwest termination overlaps with the Fiddle River Thrust (unnamed on the Dahlstrom, 1969, figure 14 map), whereas its southeast termination overlaps with the Bighorn Thrust. The very large and extensive McConnell Thrust also terminates in the same general area and overlaps with other adjacent faults.

Early Mapping

In teaching Rocky Mountain structural geology at McGill University, Eric often referred to Dahlstrom's (1969, 1970) watershed articles because they were firmly based on several decades of field observations, petroleum industry deep drilling, and seismic surveys. The articles also provided a coherent picture of many discrete features of the Rocky Mountains and a geometrically consistent method to 'balance' cross-sections that is still used today to constrain our interpretations of the subsurface geometry of these regions. The transfer zone concept intrigued Eric, who thought that through further field work, one might identify features specifically related to these thrust transfer zones. Eric was an accomplished field geologist: his Miette map (1960; 2010) is a work of art, a marvel of folds, faults, and deformed layer-cake stratigraphy that, like all of his geological maps, demanded hundreds of hours of field work and airphoto interpretation and transcription. He was also a gifted drafter of balanced cross-sections and published many of these with maps. It is his disciplined approach that yielded keystone articles, maps, and cross-sections (such as Price and Mountjoy, 1970), and fostered and led to a long-standing geological research partnership with Raymond Price, beginning with the GSC Bow-Athabasca mapping operation in the 1960s.

The early mapping by Mountjoy had not focused on mesoscale features (veins, fractures and cleavage) nor anticipated the concept of transfer zones. Therefore, I was sent to the Canadian Rocky Mountains (Figure 2) to observe and properly document mesoscopic and macroscale structures in a putative transfer zone. This proved to be an elusive quest: after three field seasons, I returned to McGill with maps and many field observations of veins, fractures, and other structures, but I could not clearly identify or describe the particular properties of a single transfer zone. Perhaps in near-desperation, I turned to constructing balanced cross-sections, working on a series through the Foothills to better understand how thrust faults might transfer displacement from one to another. One principal frustration was trying to constrain the *rate* of displacement transfer between thrusts in transfer zones because it is very difficult to measure the displacement on a particular fault in cross-section relative to another one. The labour-intense exercise of constructing a closely spaced series of ten cross-sections across the Front Ranges and Foothills was very instructive toward understanding many fundamental features of thin-skinned thrust-belt geology.

We were confronted with more ‘zone’ questions beyond the transfer zones. The cross sections revealed a series of imbricated ‘triangle zones’ and folded thrusts gliding on a series of ‘décollement zones’ anchored in weak stratigraphic layers. We were in fact stumbling across features that had been noted by other mappers of Foothills geology, foremost among them being R.J.W. Douglas who had mapped the classic imbricated folded faults of the Chungo Creek area (Douglas, 1953). Our series of cross sections, based on field and subsurface observations, were eventually published in Lebel et al. (1996), where we concluded that multiple décollement levels had been active during the evolution of the belt and that they had interacted and linked with one another. This new knowledge proved very helpful in mapping the southern Canadian Foothills in the late 1990s with other GSC researchers, and led to more insights on triangle zones and multiple décollements in the Foothills (Stockmal et al., 2001).

“Bow-and-Arrow Rule” and Thrust Fault Modeling

But in 1986, Eric’s transfer zone question was still not fully resolved. Were there specific observable structures associated with these inferred transfer zones? Outcrop-scale structural analysis of veins and other elements was instructive, but did not reveal anything immediately obvious about thrust sheet mechanics. Returning to the scientific literature, we realized that the question had to be framed differently. How does a nascent thrust fault evolve to become one of a relative few dominant faults that one finds in the Rockies, the Alps, or the Himalayas? Dahlstrom’s ideas had provoked Eric’s first interests in this direction, but it was the “Bow-and-Arrow Rule” of Elliott (1976) (Figure 3), and similar insights of others examining the lateral propagation of thrust faults, that provided us with a new perspective. The bow-and-arrow rule states that thrust displacement should be at its maximum near the centre of a thrust sheet and decrease laterally to zero at its terminations (the intersections of the fault tip line with the topographic surface), and that thrust faults propagate both forward and laterally as they develop through time.

It was not immediately evident how transfer zones and the concept of linked thrust sheets as composite thrust zones (Dahlstrom, 1969) should be reconciled with the concept of laterally propagating thrust sheets (Elliott, 1976). We realized that if thrust faults indeed evolved through lateral as well as forward propagation, then the transfer zones might simply be artifacts of their final propagation phase, rather than a reflection of the interlocked mechanics of multiple thrust sheets across a broad thrust belt gliding above a common basal décollement. On the other hand, very rapid lateral propagation at the earliest stages of thrust fault formation could still lead to subsequent interaction between two or more nearly aligned thrusts via a transfer zone. At that time, active thrust faults were being studied by neotectonic geologists and seismologists (e.g. Cowie and Scholtz, 1992 a, b) and their findings also challenged the idea that thrust faults did not grow slowly and substantially laterally through time. With these pieces of the puzzle in hand, we were ready to try to model thrust belts as a series of independent thrust faults linked through a basal décollement, that also propagating laterally through a series of independent discrete events.

In the early 1990s, three-dimensional analogue simulations of thrust belts were being developed using plasticine-based centrifuge models. The centrifuge models of John Dixon and his students at Queen’s University (e.g. Liu and Dixon, 1991) produced thrust fault patterns similar to those found in nature. Through careful physical dissection (and therefore destruction) of these models in their final deformed states, one could infer how individual faults had propagated and associated folds had developed. However, the only observations possible *during* the deformation of an analogue model was periodic viewing of its upper surface (essentially a map view), through regular peeking in the temporarily stopped centrifuge.

Necessity is the mother of invention. Finding ourselves without such centrifuge equipment, an idea emerged: why not try to develop a numerical analogue model of thrust belt development using a desktop computer? This would be a thrust model that would start from a specified nucleation point and lead to a full-grown thrust fault, constrained by physical parameters from the published literature, such as the bow-and-arrow rule, and the stepwise growth of faults through minute "earthquake-like fault propagation events" (Figure 4) (see Lebel and Mountjoy, 1995 for a full description). This approach proved extraordinarily difficult to develop for the neophyte computer programmer that I was, using a rather slow Apple Macintosh microcomputer, in part because each new iteration of the program code and testing confronted us with new conceptual problems such as how to deal with the intersections of faults. The biggest problem was how to best represent the third (depth) dimension of the thrust belt. We did this with a 2½-D model, using a computer bitmap, where we moved individual pixels on the screen as if they were pieces of a thrust sheet, while following each of these pixels in the "third dimension" through a tracking matrix. We could thus know whether a particular pixel was conceptually ramping up over another one and thus track the possible intersections of faults. The computer programs (two were developed, named 'THREE THRUSTS' and 'OVERLAP') and the computer-generated models proved to be a rich source of insights into the evolution of a thrust belt. One of the programs demonstrated that a thrust belt final state, with relatively uniform shortening along strike, could be generated through a series of small faults that gradually grow to span large overlapping segments of the thrust belt (Figure 5), a stage of development not explicitly addressed by Dahlstrom (1969).

Finally, all the pieces of the puzzle were coming together. Structural analysis of the mesoscale structural elements (fractures, veins, fold axes and cleavages) along the Nikanassin thrust sheet was consistent with the conclusion that not only was initially independent thrust fault propagation a possible mechanism to balance shortening along the thrust belt (leading to the establishment of major thrust faults linked through a basal décollement), but also that strain distributed within thrust sheets though fractures and veins could reflect curvilinear patterns of individual structural domain orientations along the length of the thrust sheet. We speculated that 1 mm wide, but metres-long a-c veins observed across the strike of the fault were perhaps another fundamental mesostructure that allowed for the redistribution of strain along the thrust sheet to approach an idealized "bow" shape, as the underlying thrust fault propagated laterally at both of its extremities.

Conclusions

The thrust belt development and the related transfer zone concept posed by Dahlstrom (1969) and suggested by Eric Mountjoy in 1984 as a topic for my Ph.D. study has proven to be a fascinating field for research. Far from being an exhausted subject, many questions remain that can be pursued through future inquiries spawned from Eric's original transfer zone question. There are hints in current neotectonic and seismological research that further integrated geological investigations from these fields, through studies of micro-seismicity and micro-geodesy may lead to new insights and a better understanding of accumulated strain and its destructive release through earthquakes. Now that we know more about the 'How', in the context of earthquake mitigation, the next good question might be how do we predict where and when active thrust development occurs?

Acknowledgements

The Ph.D. research summarized here was supported by the Geological Survey of Canada (Energy, Mines and Resources Canada) and Shell Canada. From a Ph.D. proposal drafted in 1984, these efforts resulted in a thesis nearly a decade later (Lebel, 1993), as well as a number of GSC regional maps, cross-sections, and papers of the Rocky Mountain Foothills near Jasper, Alberta. Through the mentorship of Eric Mountjoy, I was fortunate to contribute to our collective understanding of the evolution of thrust belts, building on the intriguing concept of transfer zones as proposed by Dahlstrom. Under Eric's guidance, I learned to make proper geological maps, draw balanced cross-sections, and burn the 'midnight oil' to program the juvenile Macintosh computer to model thrust belts. Along this nearly ten-year course, my attention was diverted by a five-year stint with the Geological Survey of the Province of Quebec, mapping Appalachian geology, which led me to acquire GIS and programming skills that I put to good use to complete the thesis and in mapping the Rocky Mountain Foothills of Alberta. To Eric Mountjoy, other colleagues and students that I met during my varied career, and to all of those organizations listed above, I am greatly indebted. I have enjoyed a very interesting research career so far, which continues to provide me insights toward managing present and future research in the Geological Survey of Canada. Thanks to GSC colleagues Glen Stockmal, Margot McMechan and Roger Macqueen who have provided helpful review and comments on this paper. This is Natural Resources Canada – GSC contribution number 20110333.

References Cited

Cowie, P.A., and C.H. Scholz, 1992a, Physical explanation for the displacement-length relationship of faults using a post-yield fracture mechanics model: Journal of Structural Geology, v. 20, p. 1133-1148.

Cowie, P.A., and C.H. Scholz, 1992b, Displacement-length scaling relationship for faults: data synthesis and discussion: Journal of Structural Geology, v. 20, p. 1149-1156.

Dahlstrom, C.D.A., 1969, Balanced cross sections: Canadian Journal of Earth Sciences, v. 6, p. 743-757.

Dahlstrom, C.D.A., 1970, Structural geology in the eastern margin of the Canadian Rocky Mountains: Bulletin of Canadian Petroleum Geology, v. 18, p. 332-406.

Douglas, R.J.W., 1953, Chungo Creek map-area, Alberta; Geological Survey of Canada, Paper 53-3.

Elliott, D., 1976, The energy balance and deformation mechanisms of thrust sheets: Philosophical Transactions of the Royal Society of London, v. 283A, p. 289-312.

Lebel, D., 1993, Geometry, Kinematics and Computer Simulations of Thrust Faulting, central Canadian Rocky Mountains, Alberta: Unpublished Ph.D. McGill University, 155 p.

Lebel, D., and E.W. Mountjoy, 1995, Numerical modeling of propagation and overlap of thrust faults, with application to the thrust-fold belt of central Alberta: Journal Structural Geology, v. 17, p. 631-646.

Lebel, D., W. Langenberg, and E.W. Mountjoy, 1996, Structure of the central Canadian Cordilleran thrust-and-fold belt, Athabasca-Brazeau area: Alberta: a large, complex intercutaneous wedge: Bulletin of Canadian Petroleum Geology, v. 44, p. 282-298.

Liu, S., and J.M. Dixon, 1991, Centrifuge modelling of thrust faulting: structural variation along strike in fold-thrust belts: Tectonophysics, v. 188, p. 39-62.

Mountjoy, E.W., 1960, Miette, Alberta, Geological Survey of Canada Map 40-1959: Preliminary Series, scale 1:63,360 (one inch to one mile).

Mountjoy, E.W., 2010, Miette, Alberta, Geological Survey of Canada, Map 2158A, A-Series: coloured map, scale 1:50,000.

Price, R.A., and E.W. Mountjoy, 1970, Geologic structure of the Canadian Rocky Mountains between Bow and Athabasca Rivers - a progress report, *in* J.O. Wheeler, ed., Structure of the south Canadian Cordillera: Geological Association of Canada, Special Paper 6, p. 7-25.

Stockmal, G.S., D. Lebel, M.E. McMechan, and P.A. MacKay, 2001, Structural style and evolution of the triangle zone and external foothills, southwestern Alberta: Implications for thin-skinned thrust-and-fold belt mechanics: Bulletin of Canadian Petroleum Geology, v. 49, p. 472-496.

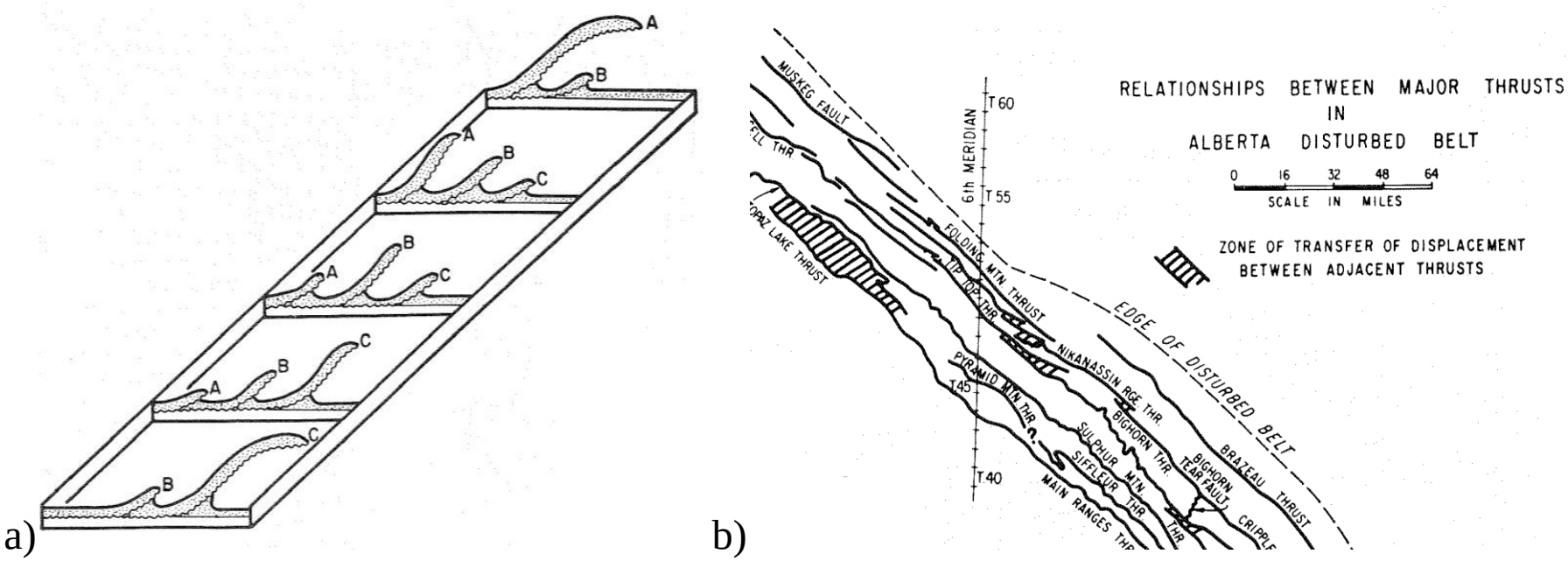

Figure 1. (a) Conceptual cross-section, and (b) map model of the shift of displacement between thrusts in a transfer zone as outlined by Dahlstrom (1969). Note that (b) is a portion of the original Dahlstrom (1969) figure, centred on the Miette, Cadomin, Cardinal River, and Mountain Park areas where the author worked with Eric Mountjoy, as described in this article. The Nikanassin thrust sheet and fault were selected for focused structural studies because it brought a slice of the Paleozoic carbonates to the surface and died neatly at both ends through transfer zones outlined by Dahlstrom (1969). The McConnell thrust sheet that ends in the area was also the subject of investigations.

Figure 2. The author on top of a ridge in the Miette area, overlooking the famous Miette Hot Springs in 1986. In the upper left in the distance is the Nikanassin thrust fault that gradually dies out toward the north and overlaps with a series of smaller thrust faults and a classic fault-tip anticline-syncline pair seen just behind the author. The famous Miette Reef Complex is in the distance in the upper right corner of the picture.

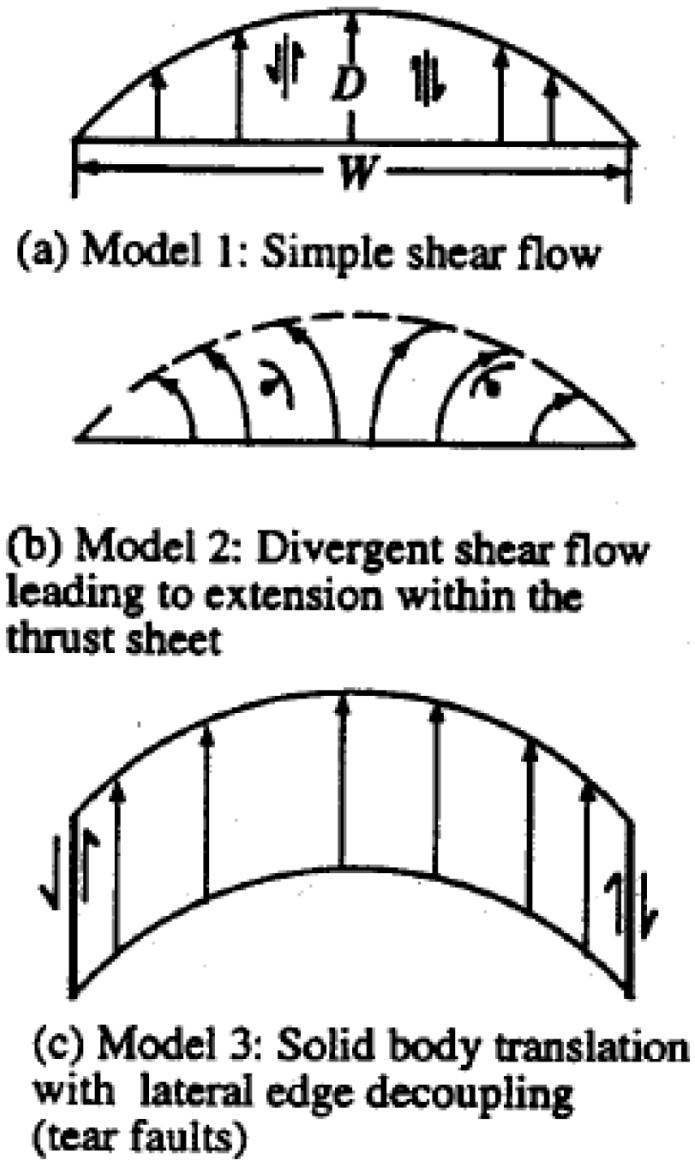

Figure 3. Comparison between various possibilities of simple models of kinematic patterns leading to a bow shape of a thrust fault (Lebel, 1993) with reference to the 'Bow and Arrow' rule of Elliott (1976).

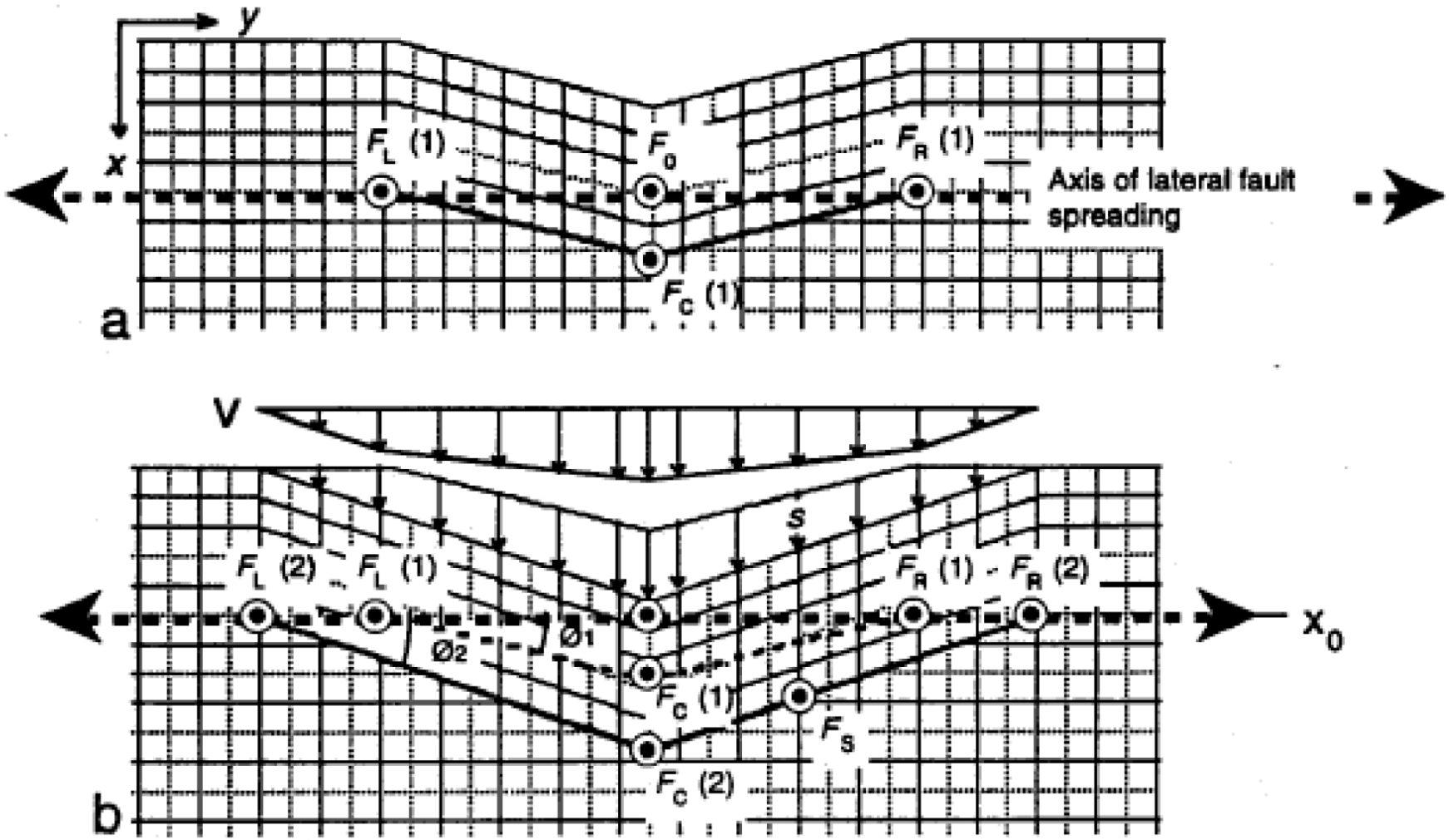

Figure 4. Computer model of a thrust fault evolving from a nucleation point F(0) through a series of propagation positions Fx(1), Fx(2). See Lebel and Mountjoy (1995) for full description.

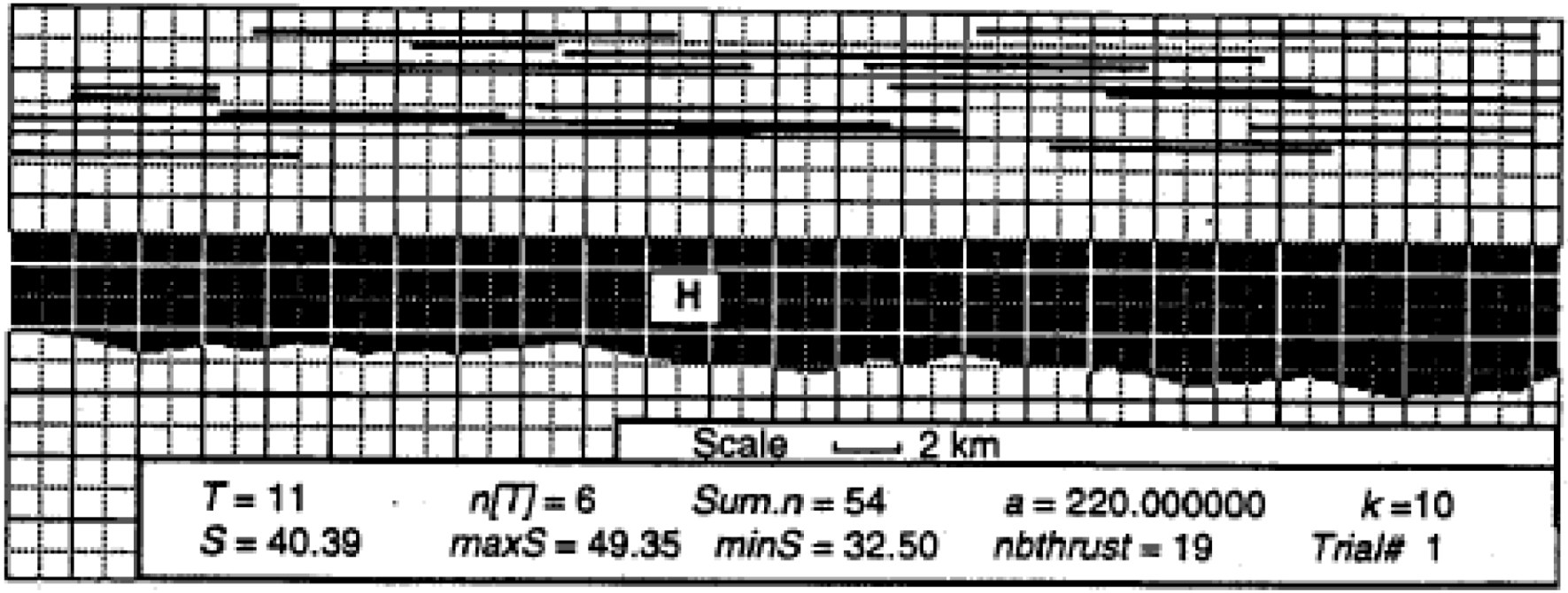

Figure 5. Lebel (1993) model of fairly even distribution of along strike thrust belt shortening through a network of gradually growing thrust faults. S = average shortening of 40.39 km; minS = minimum shortening; nbthrust = number of thrusts (19), etc. See Lebel and Mountjoy (1995) for details.